WORKING TEXT

STRAW BALLOT

bbf2015.215

WT-221a2

TR-221 Amendment 2

Revision: 13
Revision Date: November 2016

Notice

The Broadband Forum is a non-profit corporation organized to create guidelines for broadband network system development and deployment. This Broadband Forum Working Text is a draft, and has not been approved by members of the Forum. Even if approved, this Broadband Forum Working Text is not binding on the Broadband Forum, any of its members, or any developer or service provider. This Broadband Forum Working Text is subject to change. This Broadband Forum Working Text is copyrighted by the Broadband Forum, and portions of this Broadband Forum Working Text may be copyrighted by Broadband Forum members. This Working Text is for use by Broadband Forum members only. Advance written permission by the Broadband Forum is required for distribution of this Broadband Forum Working Text in its entirety or in portions outside the Broadband Forum.

This Broadband Forum Working Text is provided AS IS, WITH ALL FAULTS. Any person holding a copyright in this Broadband Forum WORKING TEXT, or any portion thereof, disclaims to the fullest extent permitted by law any representation or warranty, express or implied, including, but not limited to, any warranty:

(A) OF ACCURACY, COMPLETENESS, MERCHANTABILITY, FITNESS FOR A PARTICULAR PURPOSE, NON-INFRINGEMENT, OR TITLE;
(B) THAT THE CONTENTS OF THIS BROADBAND FORUM WORKING TEXT ARE SUITABLE FOR ANY PURPOSE, EVEN IF THAT PURPOSE IS KNOWN TO THE COPYRIGHT HOLDER;
(C) THAT THE IMPLEMENTATION OF THE CONTENTS OF THE WORKING TEXT WILL NOT INFRINGE ANY THIRD PARTY PATENTS, COPYRIGHTS, TRADEMARKS OR OTHER RIGHTS.

© The Broadband Forum. All rights reserved.

By using this Broadband Forum Working Text, users acknowledge that there is no obligation upon Broadband Forum members to license patents that are necessary to implement a Working Text, and such licensing obligations as may exist with respect to Broadband Forum Technical Reports do not attach until a proposed Technical Report is finalized by the Broadband Forum.

ANY PERSON HOLDING A COPYRIGHT IN THIS BROADBAND FORUM WORKING TEXT, OR ANY PORTION THEREOF, DISCLAIMS TO THE FULLEST EXTENT PERMITTED BY LAW (A) ANY LIABILITY (INCLUDING DIRECT, INDIRECT, SPECIAL, OR CONSEQUENTIAL DAMAGES UNDER ANY LEGAL THEORY) ARISING FROM OR RELATED TO THE USE OF OR RELIANCE UPON THIS WORKING TEXT; AND (B) ANY OBLIGATION TO UPDATE OR CORRECT THIS WORKING TEXT.

The text of this notice must be included in all copies of this Broadband Forum Working Text.

Revision History

Revision Number	Revision Date	Revision Editor	Changes
Orig	February 2015	Yuanlong Jiang, Huawei	Original
01	May 2015	Yuanlong Jiang, Huawei Haijun Wang, China Unicom	Add the time synchronization texts per bbf2015.217.01 which was approved by conf. call on 18th March, 2015
02	July 2015	Yuanlong Jiang, Huawei Haijun Wang, China Unicom	Resolve concerns on the definitions raised during the Portsmouth meeting
03	August 2015	Yuanlong Jiang, Huawei Haijun Wang, China Unicom	Resolve concerns on the definitions raised during the Portsmouth meeting
04	September 2015	Yuanlong Jiang, Huawei Haijun Wang, China Unicom	Baseline texts approved in Porto meeting, and incorporate bbf2015.461.2 and bbf2015.482.2
05	November 2015	Yuanlong Jiang, Huawei Haijun Wang, China Unicom	Baseline texts as approved in conf. call of September 23, 2015
06, 07	January 2016	Yuanlong Jiang, Huawei Haijun Wang, China Unicom	Add the texts from bbf2015.842.02 per BBFQ4 meeting held in Puerto Vallarta
08	March 2016	Yuanlong Jiang, Huawei Haijun Wang, China Unicom	Add Editor's notes on Figure B.1 & B.2 per Hongkong meeting
09	March 2016	Yuanlong Jiang, Huawei Haijun Wang, China Unicom	Update Figure B.1 & B.2 and add texts from bbf2016.121 per Hongkong meeting
10	May 2016	Yuanlong Jiang, Huawei Haijun Wang, China Unicom	Add the texts from bbf2016.450.00 per BBFQ2 meeting held in Prague
11	August 2016	Yuanlong Jiang, Huawei Haijun Wang, China Unicom	Add the texts from bbf2016.452.02 per BBFQ3 meeting held in Berlin

 © The Broadband Forum. All rights reserved

12	October 2016	Yuanlong Jiang, Huawei Haijun Wang, China Unicom	Add the texts from bbf2016.1070.01 per BBFQ4 meeting held in Kansas and some editorial updates
13	November 2016	Yuanlong Jiang, Huawei Haijun Wang, China Unicom	Straw Ballot version

Comments or questions about this Broadband Forum Working Text should be directed to info@broadband-forum.org.

Editor	Yuanlong Jiang	Huawei	jiangyuanlong@huawei.com
	Haijun Wang	China Unicom	wanghj288@chinaunicom.cn
IP/MPLS&Core WG Chairs	David Sinicrope	Ericsson	david.sinicrope@ericsson.com
	Drew Rexrode II	Verizon	charles.a.rexrode@verizon.com

 © The Broadband Forum. All rights reserved

TABLE OF CONTENTS

EXECUTIVE SUMMARY 6

1 PURPOSE AND SCOPE 7

1.1 PURPOSE 7
1.2 SCOPE 7

2 REFERENCES AND TERMINOLOGY 7

2.1 REFERENCES 7
2.2 DEFINITIONS 8
2.3 ABBREVIATIONS 8

3 CHANGES / UPDATES IN TR-221 9

3.1 TIME AND PHASE SYNCHRONIZATION 9
3.2 MULTI-AREA LSP SIGNALING 11
3.3 LOOP FREE ALTERNATES (LFA) 12
3.4 FULL E-TREE SERVICES USING VPLS 12

ANNEX A: SEAMLESS MPLS FOR MOBILE BACKHAUL 13

A.1 MOBILE BACKHAUL ARCHITECTURE 13

A.2 SEAMLESS MPLS 13

A.2.1 SEPARATION OF SERVICE AND TRANSPORT 14

A.2.2 SCALABLE NETWORKS AND TYPE OF NODES 14

A.3 SEAMLESS MPLS ARCHITECTURE 15

A.3.1 END-TO-END HIERARCHICAL LSP 15

A.3.2 INTER-DOMAIN ROUTING 15

A.3.3 ACCESS NODE 15

APPENDIX B: DECOUPLING SERVICES AND TRANSPORT IN MOBILE BACKHAUL 16

B.1 LTE SERVICE PROFILE AND DEPLOYMENT SCENARIOS 18

B.1.1 L3 VPN WITH MPLS PW IN ACCESS 19

B.1.2 TRANSPORT INFRASTRUCTURE 20

 © The Broadband Forum. All rights reserved

Executive Summary

With the wide deployment of LTE mobile networks and beyond, a dramatic increase of both base stations and mobile backhaul equipment poses a great challenge on the scalability of mobile backhaul networks.

TR-221 defined the use of MPLS in Mobile Backhaul access and aggregation networks. It created reference architectures for MPLS in Mobile Backhaul networks and included specifications for the various transport scenarios that are depicted in the reference architectures. TR-221 Amendment 1 addressed additional issues and features of the control, user and management planes that were not included in the original TR-221.

This amendment provides new features to TR-221, including time and phase synchronization, enhancements on scalability such as support of seamless MPLS and new services such as full E-Tree service using VPLS. This amendment is applicable to and addresses backhaul up through 3GPP Rel.11 and beyond.

 © The Broadband Forum. All rights reserved

1 Purpose and Scope

1.1 Purpose

This document will provide new amendments to TR-221, including specifications on time and phase synchronization, enhancements on scalability such as support of multi-area LSP signaling, full E-Tree service support using VPLS and seamless MPLS. This amendment is applicable to and addresses backhaul up through 3GPP Rel.11 and beyond.

1.2 Scope

This amendment adds some functions which are not addressed in TR-221, including:
- Time and phase synchronization
- Multi-area LSP signaling
- Seamless MPLS
- Loop free alternates (LFA)
- Full E-Tree support using VPLS

2 References and Terminology

2.1 References

Document		Title	Source	Year
[1]	MEF6.2	*EVC Ethernet Services Definitions Phase 3*	MEF	2014
[2]	TR-221	*Technical Specification for MPLS in Mobile Backhaul Networks*	BBF	2011
[3]	RFC 3107	*Carrying Label Information in BGP-4*	IETF	2001
[4]	RFC 4206	Label Switched Paths (LSP) Hierarchy with Generalized Multi-Protocol Label Switching (GMPLS) Traffic Engineering (TE)	IETF	2005
[5]	RFC 5036	LDP Specification	IETF	2007
[6]	RFC 5150	Label Switched Path Stitching with Generalized Multiprotocol Label Switching Traffic Engineering (GMPLS TE)	IETF	2008
[7]	RFC 5283	LDP Extension for Inter-Area Label	IETF	2008

 © The Broadband Forum. All rights reserved

		Switched Paths (LSPs)		
[8]	RFC 5286	Basic Specification for IP Fast Reroute: Loop-Free Alternates	IETF	2008
[9]	RFC 7490	Remote Loop-Free Alternate (LFA) Fast Reroute (FRR)	IETF	2015
[10]	RFC 7796	Ethernet-Tree (E-Tree) Support in Virtual Private LAN Service (VPLS)	IETF	2016
[11]	G.8273.2	Timing characteristics of telecom boundary clocks and telecom time slave clocks	ITU-T	2014
[12]	G.8275	*Architecture and requirements for packet-based time and phase distribution*	ITU-T	2013
[13]	G.8275.Amd	*Architecture and requirements for packet-based time and phase distribution, Amendment 1*	ITU-T	2015
[14]	G.8275.1	*Precision time protocol telecom profile for phase/time synchronization with full timing support from the network*	ITU-T	2014
[15]	G.8275.2	*Precision time protocol telecom profile for phase/time synchronization with partial timing support from the network*	ITU-T	2016
[16]	1588v2	*Precision Clock Synchronization Protocol for Networked Measurement and Control Systems*	IEEE	2008

2.2 Definitions

Telecom Grandmaster (T-GM), see Section 5 of G.8275.1 [14].
Telecom Time Slave Clock (T-TSC), see Section 5 of G.8275.1 [14].
Telecom Boundary Clock (T-BC), see Section 5 of G.8275.1 [14].
Telecom Transparent Clock (T-TC), see Section 5 of G.8275.1 [14].

2.3 Abbreviations

E-Tree	Ethernet Tree
PRC	Primary Reference Clock
PRTC	Primary Reference Time Clock
T-BC	Telecom Boundary Clock

 © The Broadband Forum. All rights reserved

T-BC-P Partial Support Telecom Boundary Clock
T-GM Telecom Grandmaster
T-TC Telecom Transparent Clock
T-TC-P Partial Support Telecom Transparent Clock
T-TSC Telecom Time Slave Clock
T-TSC-A Assisted Partial Support Telecom Time Slave Clock
T-TSC-P Partial Support Telecom Time Slave Clock

3 Changes / Updates in TR-221

3.1 Time and phase synchronization

The following texts are to be added as a new section after Section 9 of TR-221.

3.1.1 Time and phase distribution requirements

Stringent time/phase synchronization is needed for some mobile networks, such as TD-SCDMA and LTE TDD. Though GPS/GNSS can provide accurate timing, they are not available by the base station all the time. Service providers need a mechanism to deliver phase/time in high precision over their packet networks in an interoperable way.
Depending on the location of the Primary Reference Time Clock (PRTC), a Distributed PRTC method or a Packet-based method can be used.

3.1.2 Distributed PRTC based time and phase distribution

In this case, the PRTC function is located directly at the base station or the edge of the mobile network (e.g., CSG); typically a GNSS receiver is connected to the base station or the CSG. Therefore, the time synchronization reference is directly delivered from the PRTC to the base station or the CSG.

3.1.3 Packet based time and phase distribution

3.1.3.1 Time and phase distribution with full timing support from the network

It can further be classified into the following 3 cases:

- Case A: centralized PRTC co-located with Primary Reference Clock (PRC)

In case A, the PRTC is co-located with the PRC in the aggregation network (MASG), and may receive a frequency reference from the PRC (the two functions may be integrated within the same equipment). The time synchronization reference is then delivered from the PRTC via the packet master all along the mobile backhaul network, down to the base station, using a time protocol such as PTPv2.

- Case B: centralized PRTC not co-located with PRC

In case B, the PRTC is located in the aggregation network (MASG), but not co-located with the PRC. The PRTC may receive the frequency reference from the PRC. The time synchronization

 © The Broadband Forum. All rights reserved

reference is then delivered from the PRTC via a packet master (T-GM) all along the mobile backhaul network, down to the base station, using a time protocol such as PTPv2.

- Case C: PRTCs in access networks

In case C, the PRTC is located in an access network; typically a GNSS receiver is added to an access device. The PRTC may receive the frequency reference from the PRC. The time synchronization reference is then delivered from the PRTC via a packet master (T-GM) all along the mobile backhaul network, down to the base station, using a time protocol such as PTPv2.

These packet based time and phase synchronization cases can be fulfilled by the mechanism and PTP profile as defined in G.8275.1. The specific architecture is described in G.8275 which allows the distribution of phase/time with full timing support from the network, and is based on the second version of PTP defined in [16]. That is, all of the nodes in the transmission path will provide timing support by participating in the timing protocol, and the assumption is all the intermediate nodes are Telecom Boundary Clocks (T-BC) with physical layer frequency support.

The following requirements are needed to support packet based time and phase synchronization:

[R-1] Time and phase distribution architecture MUST be per G.8275 [12].
Note: The PRTC function may be incorporated within the MASG or other PE or implemented externally to it.

[R-2] A PE or P device that implements Telecom Boundary Clock (T-BC) function MUST support T-BC timing characteristics as defined in the ITU-T Recommendations G.8273.2 [11].

[R-3] A CSG or other PE that implements Telecom Time Slave Clock (T-TSC) function MUST support T-TSC timing characteristics as defined in the ITU-T Recommendations G.8273.2 [11].

[R-4] A CSG, PE or P device that implements packet based time and phase distribution MUST support PTP over Ethernet time distribution function as specified in G.8275.1 [14].

3.1.3.2 Time and phase distribution with partial timing support from the network

For some mobile backhaul networks, many nodes may not have timing synchronization capabilities. ITU-T specifies synchronization architecture for a use case (case E in [13]) where intermediate nodes do not provide timing support, but timing support is provided by GNSS at the network edge, with PTP acting as a backup. This is called assisted partial timing support (APTS). The node providing support at the edge of the network is called an assisted partial timing support clock (APTSC).
The mechanism and PTP profile for time and phase distribution with partial timing support are further defined in G.8275.2 [15].
The following requirements are needed to support time and phase synchronization with partial timing support from the network:

[R-5] Time and phase distribution architecture MUST be per G.8275 case E.
Note: The PRTC function may be incorporated within the MASG or implemented externally to it.

 © The Broadband Forum. All rights reserved

[R-6] A MASG MUST support the T-BC-P function as defined in G.8275.2 [15].

[R-7] A CSG or other PE MUST support T-TSC-A function as defined in the ITU-T Recommendations G.8275.2 [15].

[R-8] A CSG, or a MASG device that implements packet based time and phase distribution MUST support PTP over UDP over IPv4/IPv6 time distribution function as specified in Annex A.3 of G.8275.2 [15].

3.2 Multi-area LSP signaling

Section 5.1 of TR-221 supports inter-domain TE LSPs. This amendment provides support of different options of RSVP-TE LSPs and LDP LSPs. The multi-area LSP signaling requirements described in the subsections below are added to the end of Section 5.1.1 in TR-221 [2].

~~5.1.1~~3.2.1 Multi-area RSVP-TE Signaling

Inter-domain TE LSPs can be supported by one of three options as specified in RFC 5151 and given below:

- contiguous LSPs
- nested LSPs
- stitched LSPs.

Contiguous

A contiguous TE LSP is a single TE LSP that is set up across multiple domains using RSVP-TE signaling procedures described in Section 5.1.1/TR-221.

Nested

One or more TE LSPs may be nested within another TE LSP as described in RFC 4206 [4]. This technique can be used to nest one or more inter-domain TE LSPs into an intra-domain hierarchical LSP (H-LSP). The label stacking construct is used to achieve nesting in MPLS networks.

To improve scalability, it may be useful to aggregate LSPs by creating hierarchy of such LSPs.

[R-9] PE and P routers SHOULD support establishment of RSVP-TE LSPs using LSP hierarchy as per RFC 4206 [4].

Stitched

LSP stitching signaling procedures are described in RFC 5150 [6]. This technique can be used to stitch together shorter LSPs (LSP segments) to create a single, longer LSP. The LSP segments of an inter-domain LSP may be intra-domain LSPs or inter-domain LSPs.

 © The Broadband Forum. All rights reserved

The process of stitching LSP segments results in a single, end-to-end contiguous LSP in the data plane. But in the control plane, each segment is signaled as a separate LSP (with distinct RSVP sessions) and the end-to-end LSP is signaled as yet another LSP with its own RSVP session. Thus, the control plane operation for LSP stitching is very similar to that for nesting.

[R-10] PE and P routers SHOULD support establishment of RSVP-TE LSPs using LSP stitching as per RFC 5150 [6].

~~5.1.1~~3.2.2 Multi-area LDP Signaling

RFC 5283 [7] facilitates the establishment of Label Switched Paths (LSPs) that would span multiple IGP areas in a given Autonomous System (AS).

[R-11] PE and P routers SHOULD support establishment of inter-area LSPs using LDP as per RFC 5283 [7].

3.3 Loop free alternates (LFA)

Loop-free alternates (LFA) provides local protection for unicast traffic in pure IP or MPLS with LDP networks. In Section 5.3.3.3/TR-221 Resiliency Requirements, the following LFA support is added to the table.

MUST	MAY	MUST	[R-39a] Router supports loop-free alternate (LFA) method of FRR for LDP LSP as per RFC 5286 [8], as well as support LFA FRR for the IGP on whose routes LDP depends.
SHOULD	MAY	SHOULD	[R-39b] Router supports extension to the loop-free alternate (LFA) mechanism, described in RFC 5286, for providing additional backup connectivity for point-to-point links failures as per RFC 7490 [9].

3.4 Full E-Tree services using VPLS

MEF has defined a rooted-multipoint EVC based on E-Tree service type [1]. In a Rooted-Multipoint EVC, one or more of the UNIs must be designated as a Root and each of the other UNIs must be designated as a Leaf. An ingress Service Frame mapped to the EVC at a Root UNI may be delivered to one or more of the other UNIs in the EVC. An ingress Ethernet frame mapped to the EVC at a Leaf UNI must not result in an egress Ethernet frame at another Leaf UNI but may result in an egress Ethernet frame at some or all of the Root UNIs.

As defined in Section 9.3 of MEF 6.2, E-Tree service provides both P2P and P2MP connectivity between roots and leafs. It has advantage of MAC scalability and traffic security in leaf sites compared with the E-LAN service, that is, traffic from a leaf site will not leak into other leaf sites, and the leaf site does not need to learn and store other leaf sites' MAC address.

 © The Broadband Forum. All rights reserved

This sub-section describes how E-Tree per MEF6.2 is supported for VPLS in a PE.
The following requirements apply for PEs supporting the transport of full E-Tree services using VPLS:

[R-12] A PE node MUST support transporting and processing E-Tree service frames per Section 5 of RFC 7796 [10].

[R-13] The following requirements apply for E-Tree signaling in VPLS:

- For a PE implementing LDP signaling for VPLS, E-Tree signaling per Section 6.1 of RFC 7796 [10] MUST be supported;
- For a PE implementing BGP signaling for VPLS, E-Tree signaling per Section 6.2 of RFC 7796 [10] MUST be supported.

Annex A: Seamless MPLS for Mobile Backhaul

[NORMATIVE]

Support of Seamless MPLS Architecture is optional. When supported, the requirements in this section are supported.

A.1 Mobile Backhaul Architecture

TR-221 network architecture supports MPLS transport in the RAN (see TR-221 sections 1.2 and 4). The location of MPLS function for the various TNL scenarios is flexible. The mobile backhaul requirements are changing due to introduction of small cells, LTE-Advanced, cloud RAN and fronthaul. The new direction creates an evolution from long-standing static mobile backhaul (private line) network to a dynamic mobile service network.

In the traditional multi-domain network, the domains are interconnected into an end-to-end service with discrete service activation points at the domain edge. When service providers add a new service, they must provision that service at the network edge, as well as at each domain edge. Seamless MPLS enables an end-to-end service and eliminates intermediate provisioning points.

A.2 Seamless MPLS

Seamless MPLS architecture can be used to extend MPLS networks to integrate access and aggregation networks into a single MPLS domain ("Seamless MPLS"). The Seamless MPLS approach is based on existing and well known protocols.

A seamless MPLS network is one in which all forwarding packets within the network, from the time a packet enters the network until it leaves the network, are based on MPLS. Seamless MPLS introduces a systematic way of enabling MPLS end-to-end across all domains.

Seamless MPLS is not a new protocol suite but describes the architecture for deploying existing protocols. The architecture supports different services on MPLS fully integrating access,

 © The Broadband Forum. All rights reserved

aggregation and core networks. The architecture can be used for residential services, mobile backhaul, business services and support fast reroute, redundancy and load-balancing.

Seamless MPLS provides the deployment of service creation points anywhere in the network. Further it also allows SP to easily move the service between different locations.

The key elements of this architecture are:

A.2.1 Separation of Service and Transport

In traditional network deployments are built with implicit coupling between the network nodes, the underlying transport technology, and the service delivery over the network. Typically, services are provisioned in multiple segments.

The separation of services and transport is one of the key elements; Seamless MPLS provides end to end service independent transport. Therefore it removes the need for service specific configurations in network transport nodes.

With Seamless MPLS, the provisioning of services is end-to-end and minimizes the number of provisioning points. It also uses a single LSP across the access nodes. The services are running on the top of the transport.

A.2.2 Scalable Networks and Type of Nodes

The Seamless MPLS network supports multi domain and hierarchy which enable scaling. By deploying multi-domain, the scaling is limited to smaller domains and is within the state of the art.

Seamless MPLS architecture supports several different types of *nodes*, each with a different function. A physical device can combine several of these functions. Conversely, a single function can require multiple physical devices for its execution. Seamless MPLS architecture specifies different node types. They are: Access Node (AN); Aggregation Node (AGN); Transport Node (TN) and Service Node (SN).

Access Node (AN)	An access node is a node which processes customer frames or packets at layer 2 or above.
Aggregation Node (AGN)	An aggregation node is a node which aggregates several ANs.
Transport Node (TN)	Transport nodes are used to connect access nodes to service nodes, and service nodes to service nodes.
Service Node (SN)	A service node is used to create service for customers and is connected to one or more TNs.

 © The Broadband Forum. All rights reserved

A physical device can play multiple roles. For example, an access node can also be a service node, or a service node can double as a transport node.

A.3 Seamless MPLS Architecture

The intra-domain routing within each of the MPLS domains must use standard IGP protocols like OSPF or ISIS. Each of these domains is small enough there are no scaling issues.

For intra-domain MPLS LSP setup and label distribution use standard protocols like LDP and RSVP.

A.3.1 End-to-End Hierarchical LSP

Although regions add scale, they establish explicit boundaries and cut end-to-end transport into a few separate LSPs per domain. To alleviate this problem, LSPs can be stitched between domains, extending the MPLS network over multiple domains in the MBH network. These LSPs are hierarchical end-to-end LSPs. Inside each domain, hierarchical LSPs are built on the metrics of existing control plane functionality using the OSPF or IS-IS and RSVP or LDP protocols. Meanwhile all inter-domain control plane information is shared with BGP-labeled unicast (BGP-LU). Transit routers within each domain are not required to detect or participate in BGP-LU, this increases BGP-LU scalability.

A.3.2 Inter-Domain Routing

For scalability, the overall MPLS network is decomposed into multiple MPLS domains. The inter domain routing is used to establish control plane and forwarding plane hierarchies.

For inter domain LSP setup and label distribution requirements see section 5.1.1/TR-221 and section 3.2.

RFC 3107 [3] defines procedures for having BGP allocate labels for routes between BGP peers. By implementing RFC 3107 [3] at the border nodes, it allows establishment of an end-to-end contiguous LSP towards remote PEs located in different IGP domains.

[R-14] PE routers supporting Seamless MPLS architecture MUST support using BGP-4 for label distribution as per RFC 3107 [3].

A.3.3 Access Node

The access node functionality depends upon mode of architecture supported for Mobile backhaul. MPLS functionality in the access node should be kept to the smallest possible subset in particular for LDP.

[R-15] PE routers supporting Seamless MPLS architecture MUST support LDP Downstream on Demand label distribution as per RFC 5036 [5]. The default modes are:

- The default label retention mode is conservative.
- The default label distribution control mode is ordered.

 © The Broadband Forum. All rights reserved

Appendix B: Decoupling Services and Transport in Mobile Backhaul

[INFORMATIVE]

This Appendix provides examples of decoupling service and transport in mobile backhaul. Further it provides examples of LTE service profile and deployment scenarios.

TR-221 defines the use of MPLS in the access and aggregation network and provides solutions for the transport of traffic in various generation of mobile networks (e.g., HSPA, and LTE). This section provides how seamless MPLS decoupling principle works in the MBH use case for LTE and HSPA scenarios. For this use case it is proposed to use two service profiles:

- End-to-end L3 VPN deployment for LTE
- L2 VPN using VPLS for HSPA

Figure B.1 below, shows the functional roles of different network nodes for a LTE deployment scenario. In this example, the CSR in the access segment plays the role of the access node (AN), and service node (SN) originates the L3 VPN service, and interconnects with RAN. If routers in the aggregation domain function as BGP route reflectors, it serves as the RR function and as area border routers between the aggregation and access domain, corresponding to the border node (BN) function.

Some access and aggregation routers can have a pure transport node (TN) role as label-switching routers (LSRs). Aggregation routers have a border node (BN) function because they act as autonomous system (AS) boundary routers (ASBRs) or area border routers (ABRs) between the aggregation domain and the core domain, peering with the PE service router. In the core network, the remote service edge router acts as the service node (SN), connecting the evolved packet core (EPC) elements to the core network. Hierarchical end-to-end LSP provides connectivity between service nodes in access and service nodes in the core network without any mid touch points between domains at transport or services layers.

 © The Broadband Forum. All rights reserved

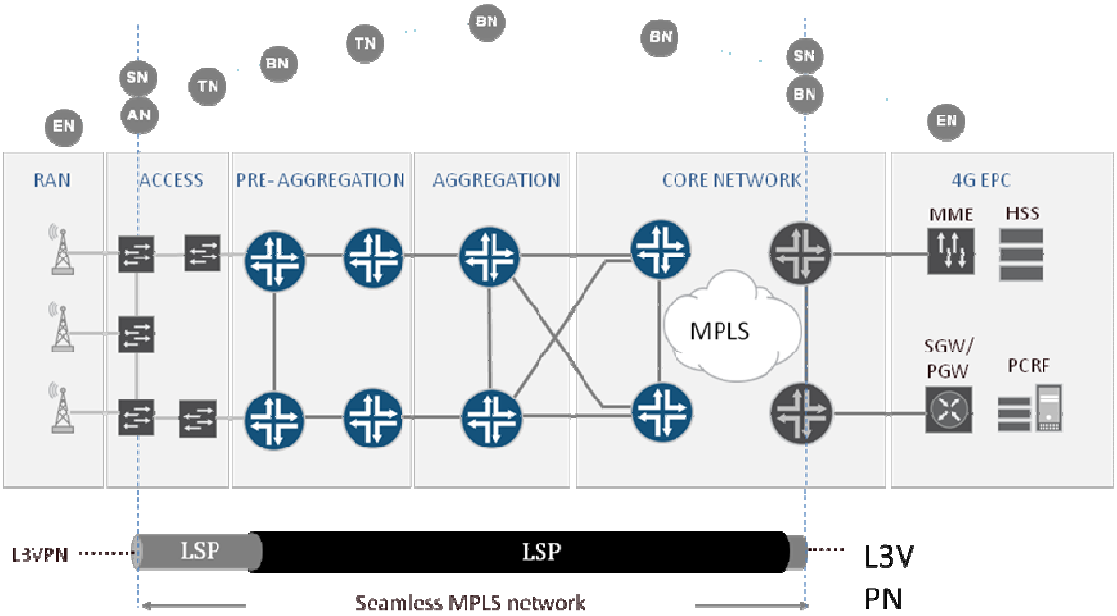

Figure B.1 Seamless MPLS functions in a 4G LTE backhaul network – end-to-end L3VPN

The example in figure B.2 uses the same network topology as in the LTE example, but it serves now to backhaul HSPA traffic from NodeB to RNC. A Layer 2 connectivity (instead of Layer 3) is used between mobile network domains in this example. In the access domain, the CSR has a pure access node (AN) function, acts as a VPLS spoke, and originates a pseudowire, which is terminated at the aggregation router. The aggregation router is a VPLS hub with an explicitly assigned service node (SN) function. Because the HSPA radio network controller (RNC) is located closer to the mobile RAN, the service node function moves from the remote edge to the aggregation router at one end, and from the CSR to the aggregation router at the other end. All the changes to the service plane happen independently from the transport plane, so that the transport plane is agnostic to changes in the service functions.

 © The Broadband Forum. All rights reserved

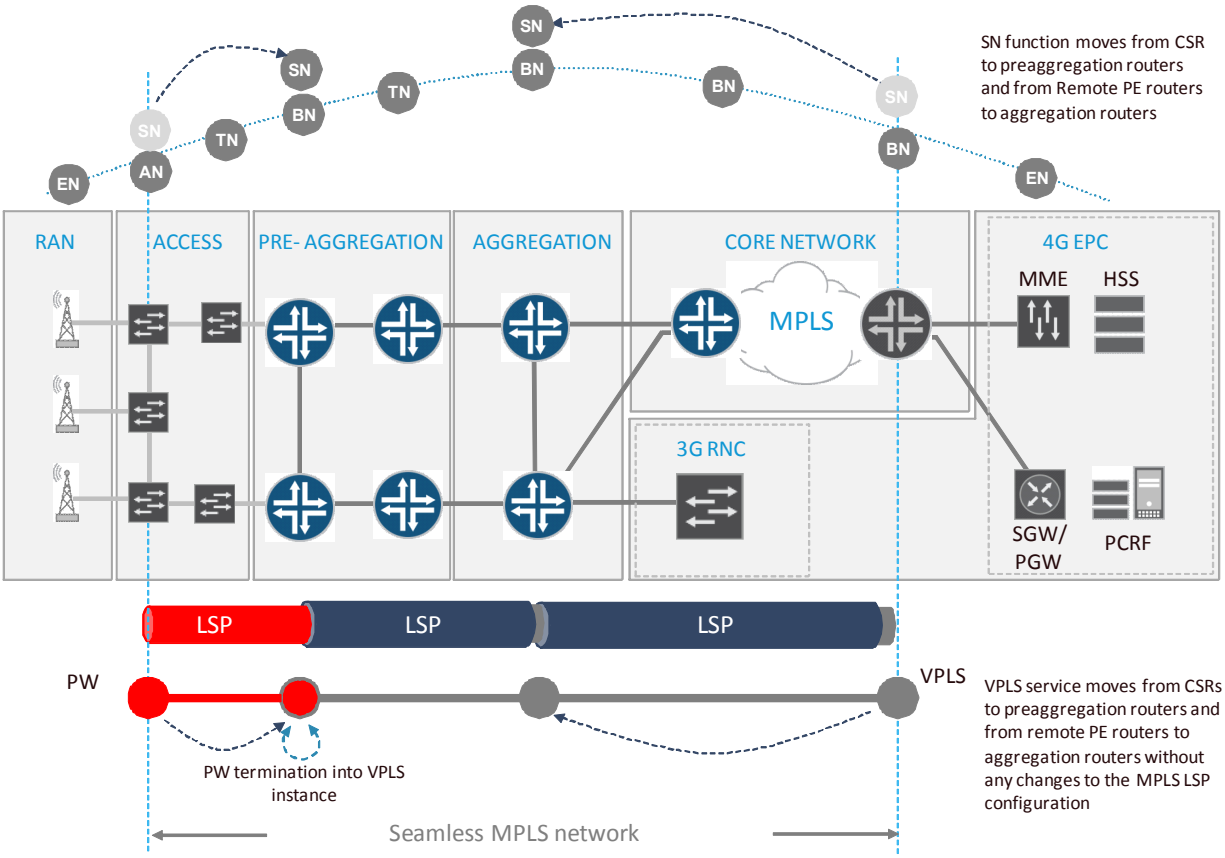

Figure B.2 Seamless MPLS Functions in an HSPA Backhaul Network

B.1 LTE Service Profile and Deployment Scenarios

The LTE mobile network uses an IPv4 infrastructure to interconnect its entities. Providing IPv4 over Ethernet connectivity is the main objective of the MBH network.

The following interfaces are defined within the LTE mobile infrastructure: S1-U; S1-MME; X2 (Signaling and User plane); eNodB management and timing.

To provide connectivity between mobile network elements over an MBH network for these interfaces, you can use different deployment scenarios:

- End-to-end L3 VPN
- L2 VPN to L3 VPN termination
- L2 VPN to VPLS termination (Hierarchical VPLS)

The following sections provide example of L3VPN with MPLS PW in access domain. Both service layer deployment and underlying transport infrastructure are provided.

 © The Broadband Forum. All rights reserved

B.1.1 L3 VPN with MPLS PW in Access

Deploying Layer 3 VPN enables this deployment scenario with pseudowire in the Access.

Figure B.3 illustrates the recommended service architecture for a 4G LTE service profile. Each eNodeB is connected on individual physical Ethernet UNI of the MBH cell site router (CSR). At the UNI, a VLAN-tagged logical interface for 4G LTE eNodeBs represents the service. A separate logical Layer 2 interfaces are used at physical UNI of the CSR per mobile network interface (S1-MME, S1-U, X2). VLAN tagging is implemented at the UNI to separate traffic between logical interfaces. To connect an eNodeB to an access node or an EPC to a PE router, you can use an arbitrary unique VLAN number within the 1 through 4095 range. The VLAN number has a local meaning within the port of each service node, so you do not need to synchronize the VLAN number across the MBH network.

To extend Layer 3 service delivery from the service node—AG1.1 and AG1.2—an MPLS pseudowire—LDP signaled pseudowire or BGP signaled Layer 2 VPN— is originated at each logical interface of the access node—CSR1.2 and CSR1.3 routers in the example. The key design for this deployment scenario is that the access pseudowires are terminated directly into the Layer 3 VPN service instances without any intermittent breakout into Layer1, Layer 2, or VLAN connections.

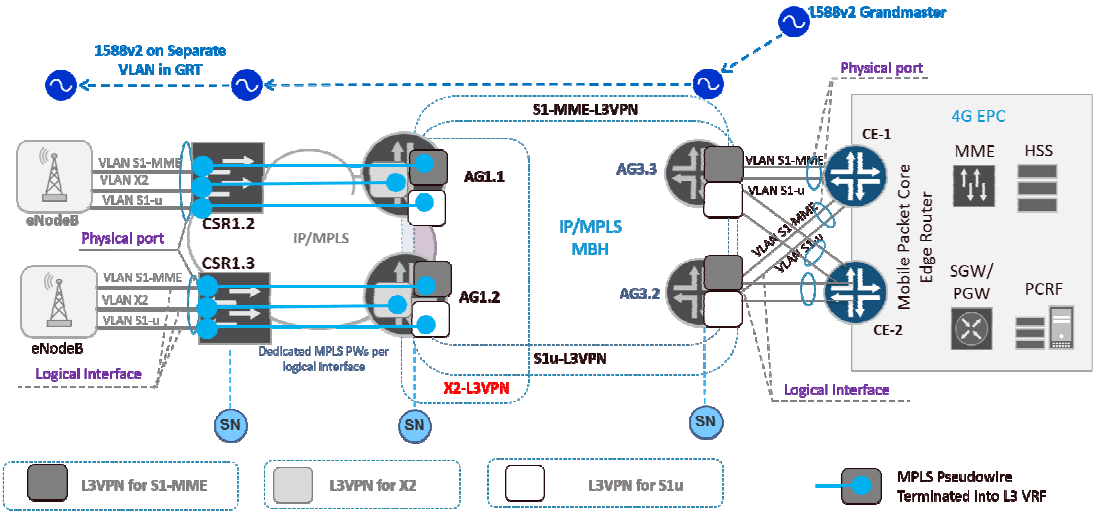

Figure B.3: 4G LTE Service Profile with Layer 3 VPN and PW in Access

 © The Broadband Forum. All rights reserved

B.1.2 Transport Infrastructure

Figure B.4 provides full protocol stack for the MPLS transport and service portions of the solution. The full protocol stack and actions taken with MPLS labels when a CSR forwards an MPLS packet and that packet travels across the network to a PE router (CSR-to-PE router).

In figure B.4, the CSR must push a minimum of two labels - a Layer 2 VPN service label (PW) and a transport label (RSVP-L) for the intraregional LSP. The service label defines the endpoints across the access domain. AG1 routers apply a pop action to the Layer 2 VPN service label, push the new Layer 3 VPN service label, and send the packet end-to-end through the inter-domain LSP signaled with BGP-LU. Finally, the Layer 3 VPN service label is popped by the remote PE router, and the native IP packet is forwarded to the 4G EPC.

The RSVP or LDP transport label defines packet forwarding within the IGP routing region. Service routers and domain boundary routers push or pop the RSVP or LDP transport label. Transport nodes swap the RSVP or LDP transport label.

The BGP-LU label provides reachability between routing regions, domains, and autonomous systems. It is pushed or popped at the service node and swapped at the ABR/ASBR nodes.

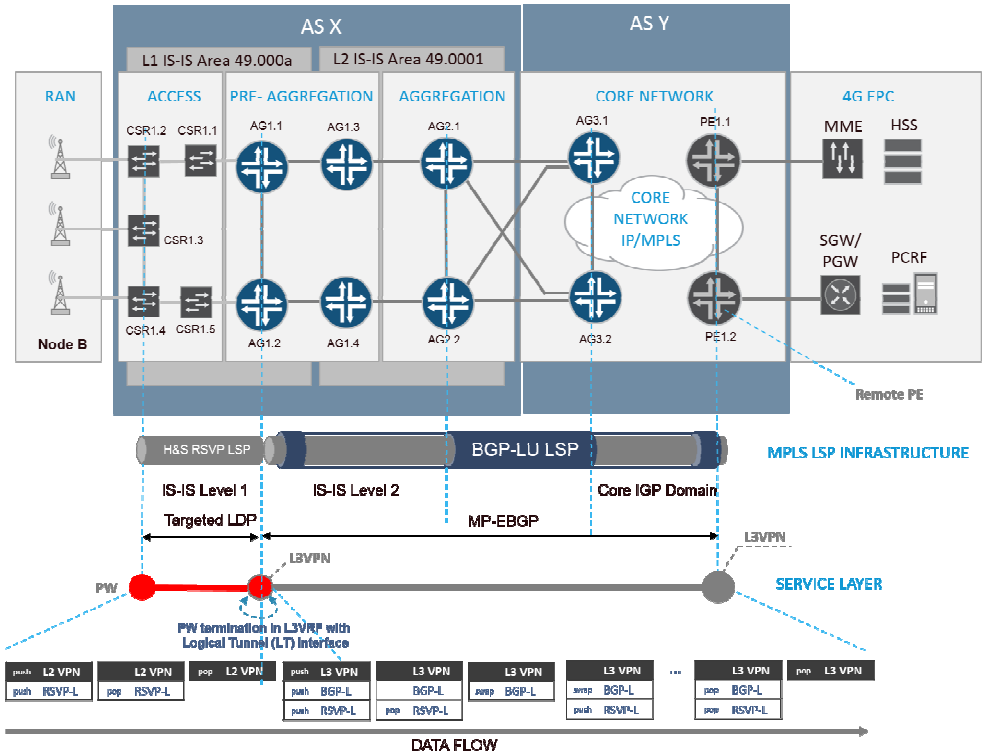

Figure B.4: Transport Infractutrue – Layer 3 VPN with PW in Access

 © The Broadband Forum. All rights reserved

End of Broadband Forum Working Text WT-221a2

© The Broadband Forum. All rights reserved